Compact Cylinder (Guide Rod Type)

C-CQM Series

Standard Specification

Action		Single Rod, Double Acting
Max. Operating Pressure		1.0 MPa
Min. Operating Pressure	ø12,ø16	0.12 MPa
	ø20~ø100	0.1 MPa
Ambinet & Fluid Temperature		Without auto switch: -10~+70℃ ,With auto switch: -10~+60℃ (No freezing)
Cushion		Both sides bumper
Stroke Length Tolerance		$^{+1.0}_{0}$ mm
Piston Speed	ø12~ø40	50~500 mm/s
	ø50~ø100	50~300 mm/s

How To Order

C - C D QM B 20 □ – 10 – M9B – Z – S

Built-in Magnet

NIL	Without
D	With

Mounting Bracket

B	Through-hole (standard)
A	Both ends tapped (ø32 ~ ø100)

Bore Size

12	12 mm
16	16 mm
20	20 mm
25	25 mm
32	32 mm
40	40 mm
50	50 mm
63	63 mm
80	80 mm
100	100 mm

Thread Type

NIL	M	ø12～ø25
	Rc	
TN	NPT	ø32～ø100
TF	G	

Stroke

Model Of Auto Switch

NIL	Without auto switch

Number Of Auto Switch

NIL	2 pcs
S	1 pcs
n	n pcs

Dimension(mm)

Ø12~Ø25

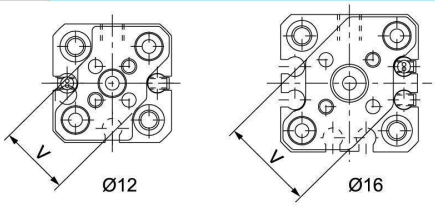

Stroke/Model Of Auto Switch

Bore Size (mm)	Standard Stroke (mm)	Model Of Auto Switch	
		Perpendicular *	In-line
12·16	5,10,15,20,25,30	M9N M9P M9B	
20·25	5,10,15,20,25,30,35,40,45,50		
32·40	5,10,15,20,25,30,35,40,45,50,75,100		
50·63 80·100	10,15,20,25,30,35,40,45,50,75,100		

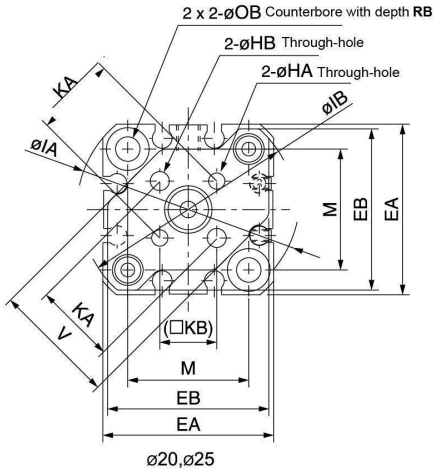

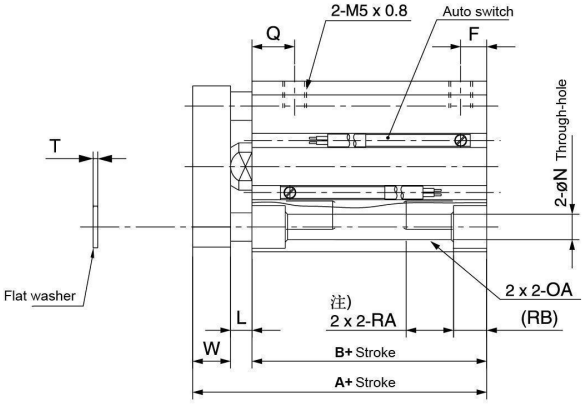

Bore Size (mm)	Stroke Range (mm)	Without Auto Switch		With Auto Switch		EA	EB	F	HA	OA	HB	IA	IB	KA	KB	L	M	N	OB	Q	RA	RB	T	V	W
		A	B	A	B																				
12	5~30	26.5	17	31.5	22	25	24	5	M3 x 0.5	M4 x 0.7	3	32	31.5	10	7.1	3.5	15.5	3.5	6.5	7.5	7	4	0.5	14.9	6
16	5~30	26.5	17	31.5	22	29	28	5	M3 x 0.5	M4 x 0.7	3	38	37	14	9.9	3.5	20	3.5	6.5	7.5	7	4	0.5	20	6
20	5~50	32	19.5	42	29.5	36	34	5.5	M4 x 0.7	M6 x 1.0	4	47	45.5	17	12	4.5	25.5	5.4	9	9	10	7	1	26	8
25	5~50	35.5	22.5	45.5	32.5	40	38	5.5	M5 x 0.8	M6 x 1.0	5	52	50.5	22	15.6	5	28	5.4	9	11	10	7	1	30	8

Dimension(mm)

ø32～ø50

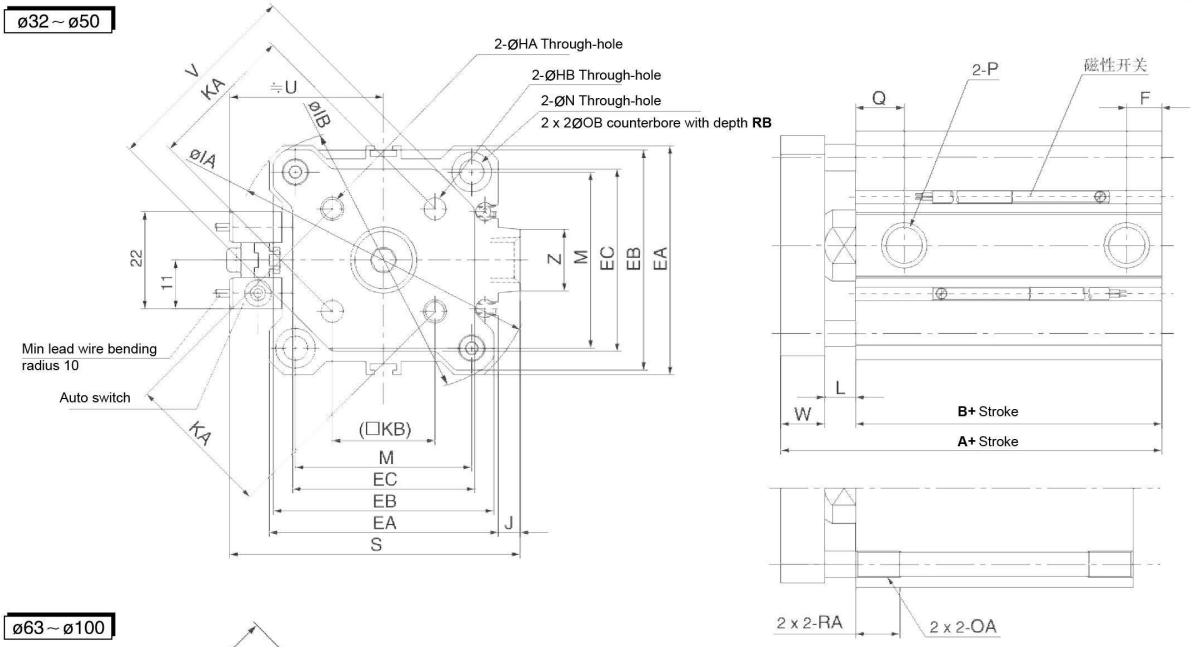

ø63～ø100

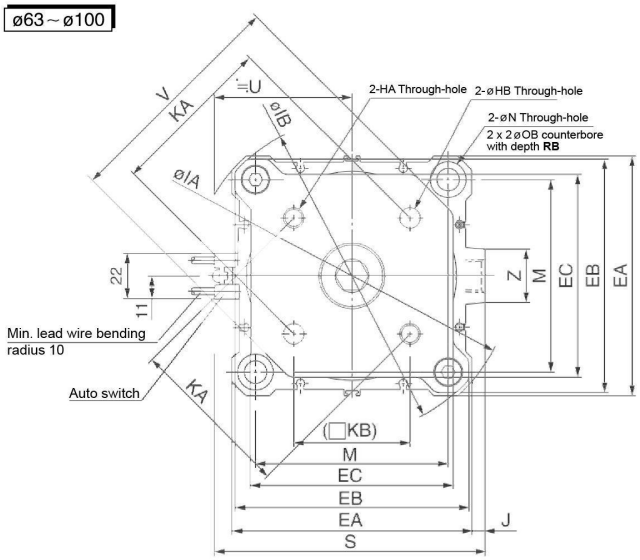

Both Ends Tapped (C-CQMA)

Bore Size (mm)	HA	OA	HB	IA	IB	J	KA
32	M5 x 0.8	M6 x 1.0	5	60	58.5	4.5	28
40	M5 x 0.8	M6 x 1.0	5	69	67.5	5	33
50	M6 x 1.0	M8 x 1.25	6	86	84.5	7	42
63	M6 x 1.0	M10 x 1.5	$6^{+0.2}_{0}$	103	100	7	$50^{+0.2}_{0}$
80	M8 x 1.25	M12 x 1.75	$8^{+0.2}_{0}$	132	129	6	$65^{+0.2}_{0}$
100	M10 x 1.5	M12 x 1.75	$10^{+0.2}_{0}$	156	153	6.5	$80^{+0.2}_{0}$

Bore Size (mm)	KB	L	M	N	OB	RA	RB	S	U	V	W	Z
32	19.8	7	34	5.5	9	10	7	58.5	31.5	38	10	14
40	23.3	7	40	5.5	9	10	7	66	35	46	10	14
50	29.7	8	50	6.6	11	14	8	80	41	58	12	19
63	35.4	8	60	9	14	18	10.5	93	47.5	69	12	19
80	46	10	77	11	17.5	22	13.5	112.5	57.5	89	14	26
100	56.6	10	94	11	17.5	22	13.5	132.5	67.5	113	16	26

Bore Size (mm)	Stroke Range (mm)	Without Auto Switch							With Auto Switch							EA	EB	EC
		A	B	F	Q	P –	P TN	P TF	A	B	F	Q	P –	P TN	P TF			
32	5	40	23	5.5	11.5	M5 x 0.8	–	–	50	33	7.5	10.5	Rc1/8	NPT1/8	G1/8	45	43	34.4
	10～50			7.5	10.5	Rc1/8	NPT1/8	G1/8										
	75・100	50	33															
40	5～50	46.5	29.5	8	11	Rc1/8	NPT1/8	G1/8	56.5	39.5	8	11	Rc1/8	NPT1/8	G1/8	52	50	41.4
	75・100	56.5	39.5															
50	10～50	50.5	30.5	10.5	10.5	Rc1/4	NPT1/4	G1/4	60.5	40.5	10.5	10.5	Rc1/4	NPT1/4	G1/4	64	62	53.4
	75・100	60.5	40.5															
63	10～50	56	36	10.5	15	Rc1/4	NPT1/4	G1/4	66	46	10.5	15	Rc1/4	NPT1/4	G1/4	77	74	59.6
	75・100	66	46															
80	10～50	67.5	43.5	12.5	16	Rc3/8	NPT3/8	G3/8	77.5	53.5	12.5	16	Rc3/8	NPT3/8	G3/8	98	95	79.5
	75・100	77.5	53.5															
100	10～50	79	53	13	23	Rc3/8	NPT3/8	G3/8	89	63	13	23	Rc3/8	NPT3/8	G3/8	117	114	99
	75・100	89	63															