Air Filter
C-ZFC SERIES

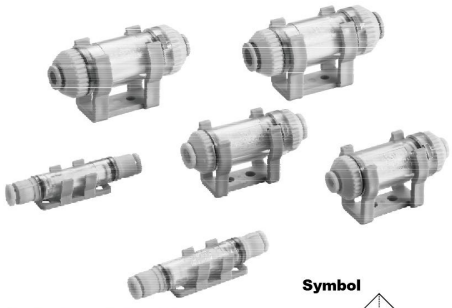

Symbol

- Small volume, light weight。
- Quick connector, easy to install。
- Replaceable filter element。
- Can replaceable filter element without tools。
- Supply port and exhaust port in the same line, easy to install。

How To Order

C-ZFC **100** - **06** **B**

① Main Body Size ② Tube Diameter ③ With Bracket

① Main Body Size		
Symbol	Size	Filter Area
050	10 l/min	470 mm²
100	20 l/min	750 mm²
200	50 l/min	1255 mm²

② Tube Diameter (mm)				
Symbol	Tube Diameter	050	100	200
03	ø3	●	-	-
23	ø3.2	●	-	-
04	ø4	●	●	-
06	ø6	-	●	●
08	ø8	-	-	●

③ Bracket	
Blank	Without bracket
B	With bracket

Replaceable Filter Element Model

Symbol	Size (mm)
C-ZFC05	ø6 x ø4 x L25
C-ZFC10	ø12 x ø8 x L20
C-ZFC20	ø16 x ø12 x L25

Characteristic Curve

Fluid: Air

Temperature: Room Temperature

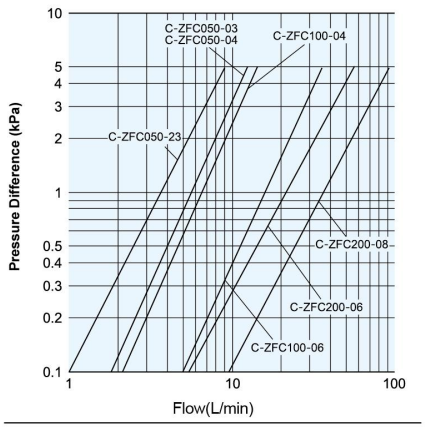

Specification

Fluid	Air
Operating Pressure Range	-100 ~ 0 kPa
Filter Element Pressure Difference Resistance	0.1 MPa
Operating And Environment Temperature	0 ~ 60 ℃
Filtration Accuracy	10 μm

Replacement Of Filter Element

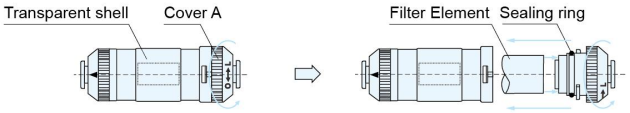

1.Stop operating and decrease the internal pressure to atmospheric pressure。
2. rotate the cover A to bottom anticlockwise(about 45°)。
3.Pull up cover A and tear down the filter element,cleaning the dust and fragment by air blow gun(make sure the seal ring not be broken)。
4.Put a new filter element into the shell。
5.Use the internal groove on the shell to adjust the position of filter element and then rotate the cover A clockwise until can't rotate。
6.Restart。

Dimension

(mm)

<C-ZFC05>

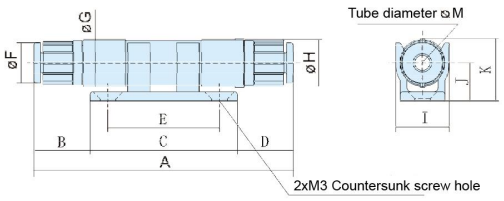

<C-ZFC10,20>

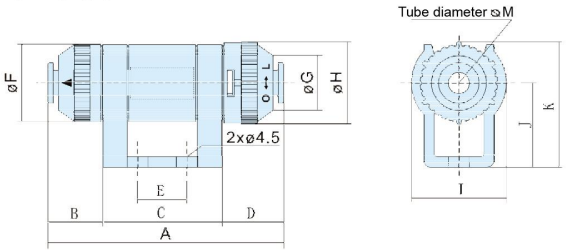

Model	A	B	C	D	E	øF	øG	øH	I	J	K	øM
C-ZFC050-03	58	12.5	33	12.5	25	10	10.5	10.5	12	8.5	13.8	3
C-ZFC050-23												3.2
C-ZFC050-04												4
C-ZFC100-04	53.2	9.1	30	14.1	10	18	11.6	19.5	23	20	29	
C-ZFC100-06												6
C-ZFC200-06	67	15.5	34	17.5	14	22	15.6	23.1	27	24	35	
C-ZFC200-08												8